CHARLOTTE
PIPE AND FOUNDRY COMPANY®

Service

List Price Schedule SV-122
Effective January 1, 2022
(Updated April 3, 2023)
Supersedes Price Schedule SV-921

Possession of this price list shall not be construed as an offer to sell the products listed.
Charlotte Pipe, Charlotte, and "You can't beat the system" are registered trademarks of Charlotte Pipe and Foundry Company.
©1901-2023 Charlotte Pipe and Foundry Company

MADE IN USA
ASTM A 74

>> Service Cast Iron Soil Pipe and Fittings

Please contact Customer Service or refer to Excel and HTML price sheets on www.charlottepipe.com for crate and half-crate quantities.

Part No. SV 1
Pipe, 5′ Lengths, Single Hub

Size	*UPC# 611942-	Weight	List Price Each
2″x5′	00851	23.8	**$229.20**
3″x5′	00852	31.8	**234.30**
4″x5′	00853	44.3	**271.60**
5″x5′	00854	57.1	**440.90**
6″x5′	00855	69.2	**514.40**
8″x5′	00856	101.0	**779.90**
10″x5′	00857	150.9	**1,103.40**
12″x5′	00858	197.3	**1,456.50**
15″x5′	00859	302.7	**2,273.50**

Part No. SV 3
Pipe, 10′ Lengths, Single Hub

Size	*UPC# 611942-	Weight	List Price Each
2″x10′	00869	40.1	**$228.10**
3″x10′	00870	59.5	**299.90**
4″x10′	00871	75.1	**389.80**
5″x10′	00872	105.7	**550.30**
6″x10′	00873	122.8	**670.30**
8″x10′	00874	190.0	**1,043.50**
10″x10′	00875	276.1	**1,736.80**
12″x10′	00876	345.9	**2,523.20**
15″x10′	00877	525.1	**3,687.80**

Part No. SV 4
Pipe, 30″ Lengths, Double Hub

Size	*UPC# 611942-	Weight	List Price Each
2″x30″	00878	13.8	**$177.50**
3″x30″	00879	18.8	**222.20**
4″x30″	00880	27.1	**251.90**
6″x30″	16581	38.2	**461.00**

Note: Shading indicates new items.

You can't beat the system.®

Part No. SV 5
Quarter Bend

Size	*UPC# 611942-	Weight	List Price Each
2	00881	5.1	**$51.80**
3	00882	7.7	**69.20**
4	00883	13.1	**108.60**
5	00884	16.2	**151.20**
6	00885	21.7	**188.60**
8	00886	39.9	**568.20**
10	00887	57.3	**830.30**
12	00888	90.9	**1,124.90**
15*			

Part No. SV 7
Sixth Bend

Size	*UPC# 611942-	Weight	List Price Each
2	00895	4.3	**$65.50**
3	00896	6.9	**86.50**
4	00897	10.8	**103.60**
5	00898	13.3	**200.30**
6	00899	16.4	**235.70**
8	00900	32.5	**514.00**

⚠ WARNING

Testing with or use of compressed air or gas in Cast Iron pipe or fittings can result in explosive failures and cause severe injury or death.

- NEVER test with or transport/store compressed air or gas in Cast Iron pipe or fittings.
- NEVER test Cast Iron pipe or fittings with compressed air or gas.
- ONLY use Cast Iron pipe and fittings for drain, waste and vent or sanitary sewer applications.

*Please see Extra Heavy price sheet.
See page 14 for pipe bundle quantities.

PO BOX 35430 CHARLOTTE, NORTH CAROLINA 28235
SALES PHONE (704) 348 6450 (800) 572 4199
TECHNICAL PHONE (800) 438 6091 FAX (800) 553 1605
WWW.CHARLOTTEPIPE.COM

Part No. SV 8
Eighth Bend

Size	*UPC# 611942-	Weight	List Price Each
2	00901	4.2	**$36.90**
3	00902	6.5	**57.80**
4	00903	10.7	**84.60**
5	00904	13.1	**119.00**
6	00905	16.6	**143.30**
8	00906	32.3	**428.20**
10	00907	44.1	**615.40**
12	00908	70.4	**1,167.30**
15*			

Part No. SV 9
Sixteenth Bend

Size	*UPC# 611942-	Weight	List Price Each
2	00910	3.4	**$41.70**
3	00911	6.0	**63.80**
4	00912	8.8	**73.90**
5	00913	11.6	**121.80**
6	00914	13.8	**125.20**
8	00915	26.0	**439.10**
10	00916	37.1	**674.40**
12	00917	63.3	**1,585.50**
15*			

Part No. SV 10
Quarter Bend with Low Heel Inlet

Size	*UPC# 611942-	Weight	List Price Each
3x2	00918	9.8	**$177.70**
4x2	00919	13.0	**189.50**

Illustration Shows Right Hand Inlet

Part No. SV 12
Quarter Bend with Side Inlet
(Cup Hub Inlet)

Size	*UPC# 611942-	Weight	List Price Each
4 w/2 RH	00926	16.5	**$187.10**
4 w/2 LH	00925	16.5	**187.10**

Part No. SV 15
Double Quarter Bend

Size	*UPC# 611942-	Weight	List Price Each
4	00932	16.1	**$316.00**

Part No. SV 18
Reducing Quarter Bend

Size	*UPC# 611942-	Weight	List Price Each
3x2	00934	6.3	**$92.00**
4x2	00935	11.7	**115.00**
4x3	00936	9.1	**143.30**

*Please see Extra Heavy price sheet.

Part No. SV 23
Single Hub Return Bend

Size	*UPC# 611942-	Weight	List Price Each
3	00944	10.0	**$222.50**
4	00945	16.4	**252.60**

Part No. SV 25
Long Quarter Bend

Size	*UPC# 611942-	Weight	List Price Each
2x12	00946	6.9	**$148.30**
3x12	00949	10.3	**167.20**
4x12	00952	15.4	**153.90**
4x16	00954	20.4	**289.00**
4x18	00955	21.4	**217.20**
4x24	00956	27.9	**325.20**

Part No. SV 26
Long Eighth Bend

Size	*UPC# 611942-	Weight	List Price Each
2x12	00959	6.2	**$156.70**
3x12	00963	10.6	**176.00**
3x18	00965	12.4	**186.60**
4x12	00967	15.6	**170.50**
4x18	00969	20.6	**220.40**
6x18	00972	29.3	**469.60**

Part No. SV 29
Short Sweep Bend

Size	*UPC# 611942-	Weight	List Price Each
2	00978	6.2	**$50.70**
3	00979	9.4	**90.60**
4	00980	16.6	**138.80**
5	00981	20.7	**233.70**
6	00982	26.6	**281.20**
8	00983	39.5	**610.20**
10	00984	75.3	**1,252.90**
12	00985	109.3	**2,914.90**

Part No. SV 30
Long Sweep Bend

Size	*UPC# 611942-	Weight	List Price Each
2	00987	7.6	**$78.80**
3	00988	12.2	**112.30**
4	00989	21.2	**164.90**
5	00990	25.3	**272.50**
6	00991	29.9	**331.40**
8	00992	52.9	**749.70**
10	00993	82.6	**1,267.60**
12	00994	103.5	**2,054.30**
15*			

Part No. SV 31
Reducing Long Sweep Bend

Size	*UPC# 611942-	Weight	List Price Each
3x2	00996	11.2	**$157.10**
4x3	00997	17.6	**252.90**

Part No. SV 32
Combination Wye and Eighth Bend
(Charlotte Pattern)

Size	*UPC# 611942-	Weight	List Price Each
4	00999	20.3	**$190.10**

Part No. SV 33
Combination Wye and Eighth Bend
(Long Turn Pattern)

Size	*UPC# 611942-	Weight	List Price Each
2	01000	8.6	**$90.60**
3x2	01006	11.1	**104.10**
3	01001	14.8	**137.60**
4x2	01007	15.5	**140.30**
4x3	01008	19.2	**165.20**
4	01002	25.7	**189.90**
5x2	01009	14.6	**291.00**
5x3	01010	21.3	**388.30**
5x4	01011	25.9	**345.10**
5	01003	33.6	**360.10**
6x2	01012	19.6	**294.30**
6x3	01013	24.7	**313.10**
6x4	01014	31.7	**328.70**
6x5	01015	36.2	**453.30**
6	01004	44.2	**455.80**
8x2	01016	34.0	**620.30**
8x4	01017	43.2	**546.40**
8x5	01018	52.6	**842.50**
8x6	01019	55.7	**750.20**
8	01005	85.6	**1,124.90**

Part No. SV 35
Double Combination Wye and Eighth Bend
(Charlotte Pattern)

Size	*UPC# 611942-	Weight	List Price Each
4	01022	26.6	**$483.10**

Part No. SV 35 F
Double Combination Wye and Eighth Bend with 2″ Cup Hub Inlet

Size	*UPC# 611942-	Weight	List Price Each
4	01038	39.8	**$641.50**

Part No. SV 35 F
Double Combination Wye and Eighth Bend
(Long Turn Pattern)

Size	*UPC# 611942-	Weight	List Price Each
2	01029	12.0	**$185.60**
3x2	01030	14.6	**206.20**
3	01031	22.0	**238.30**
4x2	01032	19.7	**241.00**
4x3	01033	26.5	**274.00**
4	01034	36.2	**390.70**
5x4	01043	32.7	**713.70**
6x4	01044	45.0	**882.80**
6	01045	69.6	**1,349.00**

Illustration Shows Right Hand Inlet On Main

Part No. SV 39 A
Combination Wye and Eighth Bend with Side Inlet
(Cup Hub Inlet)

Size	*UPC# 611942-	Weight	List Price Each
4 w/2RH	01082	28.3	**$357.30**
4 w/2LH	01083	28.3	**357.30**

Part No. SV 41
Combination Wye and Eighth Bend with Cleanout On Main

Size	IPS TAP	*UPC# 611942-	Weight	List Price Each
4	3½	01084	19.6	**$352.60**

Part No. SV 42
Straight Tee

Size	*UPC# 611942-	Weight	List Price Each
2	01085	7.0	**$104.60**
3x2	01086	9.0	**126.00**
3	01087	11.4	**155.80**
4x2	01088	12.7	**162.10**
4x3	01089	13.3	**179.40**
4	01090	16.6	**199.90**
5	01094	19.0	**424.10**
6x4	01097	21.5	**348.00**
6	01098	22.7	**418.00**
8x4	01100	33.2	**766.40**

Part No. SV 43
Sanitary Tee

Size	*UPC# 611942-	Weight	List Price Each
2	01103	7.9	**$72.40**
3x2	01104	10.9	**100.60**
3	01105	11.9	**116.90**
4x2	01106	14.2	**122.20**
4x3	01107	16.9	**131.60**
4	01108	18.6	**143.30**
5x4	01111	19.7	**268.60**
5	01112	22.3	**285.60**
6x2	01113	15.7	**253.40**
6x3	01114	21.1	**262.30**
6x4	01115	22.8	**366.20**
6	01117	29.8	**323.50**
8x4	01118	35.7	**548.20**
8x6	01120	43.0	**723.20**
8	01121	54.0	**857.10**
10x4	01123	52.0	**1,126.70**
10x6	01124	61.6	**1,237.50**
10x8	01125	68.0	**1,467.40**
10	01122	75.9	**1,572.50**
12x6	01126	79.0	**1,913.00**
12x8	01127	94.6	**2,240.90**
12x10	01128	107.0	**2,446.70**
12	01129	124.6	**2,779.10**
15x6	01130	135.6	**4,822.30N**
15x8	01131	158.9	**4,673.40**
15x12	01133	189.6	**5,167.20N**
15*			

N = Non-stock item; Contact customer service for availability.

*Please see Extra Heavy price sheet.

Part No. SV 44
Wye

Size	*UPC# 611942-	Weight	List Price Each
2	01134	8.3	**$66.00**
3x2	01135	10.9	**94.90**
3	01136	12.2	**122.20**
4x2	01137	15.5	**127.30**
4x3	01138	16.8	**140.30**
4	01139	21.9	**163.80**
5x2	01140	15.3	**217.00**
5x3	01141	19.8	**228.70**
5x4	01142	23.0	**223.10**
5	01143	27.0	**290.40**
6x2	01144	19.7	**251.30**
6x3	01145	23.7	**256.60**
6x4	01146	26.7	**254.10**
6x5	01147	29.5	**356.40**
6	01148	36.5	**376.80**
8x2	01149	32.7	**565.20**
8x3	01150	36.6	**561.90**
8x4	01151	38.3	**485.00**
8x5	01152	45.0	**572.90**
8x6	01153	49.6	**602.10**
8	01154	58.4	**921.30**
10x3	01155	54.0	**844.30**
10x4	01156	55.4	**830.30**
10x5	01157	60.6	**917.70**
10x6	01158	67.6	**905.20**
10x8	01159	86.9	**1,242.50**
10	01160	111.1	**1,488.60**
12x4	01161	75.3	**1,403.30**
12x5	01162	78.0	**1,491.20N**
12x6	01163	94.2	**1,446.20**
12x8	01164	110.0	**1,804.50**
12x10	01165	131.0	**3,312.00**
12	01166	162.0	**3,759.40**
15x4	01167	138.5	**4,690.80**
15x6	01168	153.6	**4,901.80**
15x8	01169	187.1	**4,992.70**
15x10	01170	225.0	**5,178.00**
15x12	01171	244.4	**5,277.50**
15*			

Illustration Shows Left Hand Tap

Part No. SV 50
Sanitary Tee with Left Hand Side Tap

4 w/2	01181	16.5	**$291.70**

Illustration Shows Right Hand Tap

Part No. SV 50 A
Sanitary Tee with Right Hand Side Tap

4 w/2	01188	16.5	**$291.70**

Part No. SV 50 B
Sanitary Tee with Right and Left Side Tap

4 w/2	01189	16.3	**$388.80**

*Please see Extra Heavy price sheet.

N = Non-stock item; Contact customer service for availability.

Illustration Shows Left Hand Inlet

Part No. SV 56
Sanitary Tee with Left Hand Side Inlet
(Cup Hub Inlet)

4 w/2	01196	20.2	**$302.00**

Illustration Shows Right Hand Inlet

Part No. SV 56 B
Sanitary Tee with Right Hand Side Inlet
(Cup Hub Inlet)

4 w/2	01202	21.5	**$302.00**

Part No. SV 56 C
Sanitary Tee with Right and Left Hand Side Inlet
(Cup Hub Inlet)

4 w/2	01204	23.1	**$382.90**

Illustration Shows Left Hand Inlet

Part No. SV 57
Wye with Left Hand Side Inlet
(Cup Hub Inlet)

4 w/2	01211	23.8	**$288.50**

Illustration Shows Right Hand Inlet

Part No. SV 57 A
Wye with Right Hand Side Inlet
(Cup Hub Inlet)

4 w/2	01218	23.8	**$288.50**

TO DETERMINE RIGHT OR LEFT HAND INLETS:

For All Branch Fittings.
Place the spigot near you with the branch facing upward.

For All Bends.
Place the fitting upright with spigot near you.

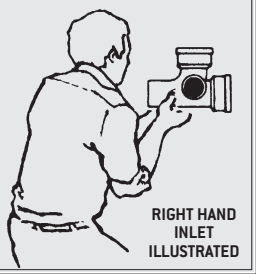

Part No. SV 71 A
Single Two-Way Cleanout

4	01222	33.5	**$610.20**

Part No. SV 71 B
Short Special Two-Way Cleanout

4	01223	16.7	**$508.10**

Part No. SV 72
Double Two-Way Cleanout

4	01224	32.9	**$353.70**
6x4x4	04402	39.1	**639.00**

Part No. SV 76
Sanitary Tee with Cleanout On Main

Size	IPS TAP	*UPC# 611942-	Weight	List Price Each
4	3½	01236	15.1	**$335.80**

Part No. SV 79
Washington Test Tee, Less Plug

Size	IPS TAP	*UPC# 611942-	Weight	List Price Each
2	2	01241	6.2	**$126.70**
3	4	01244	12.8	**283.30**
4	4	01247	18.1	**300.90**
5	5	01250	26.4	**364.50**
6	6	01253	24.7	**483.10**
8	8	01259	45.4	**872.00**
10	10	01254	68.7	**2,236.70**

Part No. SV 79
Washington Test Tee with Southern Raised-Head Brass Plug Installed

Size	IPS TAP	*UPC# 611942-	Weight	List Price Each
2	2	04395	6.5	**$160.20**
3	4	04396	13.6	**374.50**
4	4	04397	16.8	**386.90**
5	5	04398	27.6	**513.00**
6	6	04399	26.9	**792.50**
8	8	04400	44.5	**1,303.00**

Washington and Miami Test Tees with plug installed can be ordered only as shown in the catalog. When ordering Washington and Miami Test Tees with plugs other than Southern Code, please order the fitting less plug, then order the plug from the Specials and Plugs price sheet, page one.

Example 1:	Part No.	Quantity	Description
	SV 79	4	4" Washington Test Tee
	PLG 410	4	4" Ohio Plug

Example 2:	Part No.	Quantity	Description
	SV 81	4	4" Miami Test Tee
	PLG 410	4	4" Ohio Plug

When Washington and Miami Test Tees with plugs other than Southern Code are ordered, the plugs will be packed separately in a burlap bag inside shipping crate.

Part No. SV 80
Cleanout Tee with Southern Raised-Head Brass Plug Installed

Size	IPS TAP	*UPC# 611942-	Weight	List Price Each
2	1½	01265	5.7	**$149.10**
3	2	01266	8.8	**174.40**
4	3	01267	14.5	**329.60**
5	4	01268	18.8	**674.10**
6	4	01269	25.3	**988.70**
12	8	01270	94.5	**2,890.90**

Cleanout Tees can be ordered only with Southern Code brass plug installed. We do not offer this fitting less plug, or with any other type brass plug installed.

Part No. SV 81
Miami Test Tee, Less Plug

Size	IPS Tap	*UPC# 611942-	Weight	List Price Each
2	2	01271	7.0	**$157.80**
3	3	01272	11.2	**299.10**
4	4	01273	17.0	**340.70**
6	6	01274	29.5	**883.90**

Part No. SV 81 S
Miami Test Tee with Southern Raised-Head Brass Plug Installed

Size	IPS Tap	*UPC# 611942-	Weight	List Price Each
2	2	01287	7.3	**$196.10**
3	3	01288	9.7	**358.60**
4	4	01289	16.4	**438.00**
6	6	01290	25.0	**977.30**

Part No. SV 82
Test Tee with Internal Tap

Size	*UPC# 611942-	Weight	List Price Each
4	01299	15.9	**$656.10**

Part No. SV 83
Straight Tapped Tee

Size	*UPC# 611942-	Weight	List Price Each
2x1½	01302	5.5	**$100.10**
2x2	01303	6.0	**126.70**
3x1½	01304	9.0	**118.90**
3x2	01305	8.6	**114.90**
4x2	01308	12.3	**135.00**
4x3	01309	16.5	**231.90**
4x4	01310	15.5	**362.90**
5x2	01311	16.5	**436.60**
5x4	01312	25.1	**495.90**
6x4	01314	24.4	**767.40**

Part No. SV 84
Sanitary Tapped Tee

Size	*UPC# 611942-	Weight	List Price Each
2x1½	01317	5.4	**$102.20**
2x2	01318	5.8	**97.20**
3x1½	01320	7.4	**118.70**
3x2	01321	8.9	**108.80**
4x1½	01324	9.8	**148.30**
4x2	01325	11.8	**177.30**
4x3	01326	13.4	**215.20**

Part No. SV 85
Tapped Wye

Size	*UPC# 611942-	Weight	List Price Each
3x2	01331	10.3	**$163.20**
4x1½	01332	10.3	**183.40**
4x2	01333	12.7	**183.40**

Part No. SV 89
Long Sanitary Tapped Tee

Size	*UPC# 611942-	Weight	List Price Each
2x2x18	01338	8.8	**$240.60**

Part No. SV 91
Sanitary Tapped Cross

Size	*UPC# 611942-	Weight	List Price Each
2x1½	01341	11.3	**$117.80**
2x2	01342	6.6	**121.40**
3x2	01345	9.0	**163.50**
4x2	01349	11.6	**201.70**

Part No. SV 92
Tapped Double Wye

Size	*UPC# 611942-	Weight	List Price Each
4x2	01353	16.9	**$378.30**

Part No. SV 93
Tapped Cross

Size	*UPC# 611942-	Weight	List Price Each
3x2	01358	9.4	**$142.50**
4x2	01360	13.1	**181.40**

Part No. SV 108
Straight Cross

Size	*UPC# 611942-	Weight	List Price Each
4x2	01376	15.6	**$215.50**
4	01378	18.1	**269.40**

Part No. SV 109
Sanitary Cross

Size	*UPC# 611942-	Weight	List Price Each
2	01379	10.8	**$157.60**
3x2	01380	13.7	**191.40**
3	01381	15.6	**190.60**
4x2	01382	14.6	**186.60**
4x3	01383	20.0	**242.50**
4	01384	22.9	**239.20**
5x4	01385	23.2	**399.70**
6x4	01388	29.0	**485.10**
6	01387	32.8	**593.90**
8	01389	57.7	**1,674.90N**

*Please see Extra Heavy price sheet.

N = Non-stock item; Contact customer service for availability.

Part No. SV 110
Double Wye

Size	*UPC# 611942-	Weight	List Price Each
2	01392	9.7	**$161.00**
3x2	01393	14.0	**171.00**
3	01394	19.1	**200.60**
4x2	01395	16.2	**206.00**
4x3	01396	21.0	**217.20**
4	01397	27.2	**262.40**
5	01401	27.0	**506.10**
6x3	01403	24.6	**524.60**
6x4	01404	31.8	**531.40**
6	01406	47.8	**685.60**
8x4	01407	47.6	**1,145.40**
8x6	01408	57.3	**1,176.80**
8	01409	92.4	**1,653.40**
10x6	01411	73.7	**2,510.80N**
10x8	01412	99.0	**3,844.10**
10	01413	159.6	**3,984.10**
12x6	01414	103.2	**4,657.80N**
12x8	01415	125.1	**4,569.20**
12	01416	216.1	**4,560.10**
15*			

Part No. SV 114
Sanitary Cross with 2″ Side Inlet
(Cup Hub Inlet)

Size	*UPC# 611942-	Weight	List Price Each
4x4	01419	27.4	**$371.70**

Part No. SV 115
Double Wye with 2″ Side Inlet
(Cup Hub Inlet)

Size	*UPC# 611942-	Weight	List Price Each
4x4	01436	31.8	**$523.30**

Part No. SV 134
Vent Branch

Size	*UPC# 611942-	Weight	List Price Each
4	14125	19.6	**298.00**

Part No. SV 135
H Branch

Size	*UPC# 611942-	Weight	List Price Each
4x3	01444	17.0	**$278.00**
4	01445	19.6	**302.20**

Part No. SV 137
Bar Grate with Legs

Size	*UPC# 611942-	Weight	List Price Each
4	01454	1.3	**$100.10**

Part No. SV 141
45° Offset

Size	*UPC# 611942-	Weight	List Price Each
4x4	01470	11.6	**$181.40**
4x6	01471	13.8	**198.70**
4x8	01472	15.6	**222.20**

Part No. SV 143
Reducer

Size	*UPC# 611942-	Weight	List Price Each
3x2	01478	4.6	**$50.70**
4x2	01479	6.0	**57.90**
4x3	01480	7.0	**66.00**
5x2	01481	6.6	**139.80**
5x3	01482	7.6	**147.80**
5x4	01483	9.0	**84.90**
6x2	01484	8.2	**138.20**
6x3	01485	9.9	**135.10**
6x4	01486	10.4	**133.10**
6x5	01487	10.9	**143.30**
8x3	01489	14.3	**258.80**
8x4	01490	16.6	**222.20**
8x5	01491	16.4	**234.10**
8x6	01492	16.8	**228.10**
10x4	01493	20.0	**334.60**
10x5	01494	23.9	**391.60**
10x6	01495	22.2	**374.60**
10x8	01496	26.6	**375.00**
12x4	01497	32.3	**545.10**
12x6	01498	34.4	**584.30**
12x8	01499	37.3	**600.40**
12x10	01500	38.4	**610.20**
15x6	01501	52.3	**1,139.30**
15x8	01502	50.1	**1,238.50**
15x10	01503	55.7	**1,283.80**
15x12	01504	68.7	**1,298.90**

Part No. SV 144
Increaser

Size	*UPC# 611942-	Weight	List Price Each
2x4	01506	9.4	**$121.50**
3x4	01507	8.8	**133.40**
4x5	01510	12.0	**158.50**
4x6	01511	15.2	**181.00**
4x8	01512	26.0	**374.60**
5x6	01513	12.8	**267.80**
6x8	01515	24.0	**433.60**
8x10	01517	40.3	**796.60**

Part No. SV 147
Long Plain Increaser

Size	*UPC# 611942-	Weight	List Price Each
3x4x24	01528	13.6	**$197.80**
4x5x30	01529	27.4	**283.90**

Part No. SV 148
Long Tapped Increaser

Size	*UPC# 611942-	Weight	List Price Each
2x4x30	01532	22.8	**$412.60**

Part No. SV 151
Tapped Spigot

Size	*UPC# 611942-	Weight	List Price Each
4x2	01538	5.5	**$144.60**

Part No. SV 153
Double Hub Fitting

Size	*UPC# 611942-	Weight	List Price Each
2	01540	4.7	**$57.90**
3	01541	7.0	**79.40**
4	01542	9.1	**90.60**
6	01544	13.3	**177.80**
8	01545	24.5	**468.10**
10	01546	36.3	**984.40**
12	01547	46.3	**1,426.20**
15*			

Part No. SV 155
Pipe Plug

Size	*UPC# 611942-	Weight	List Price Each
2	01552	1.4	**$26.10**
3	01553	2.5	**37.10**
4	01554	4.1	**45.30**
5	01555	6.0	**89.20**
6	01556	7.5	**84.90**
8	01557	12.4	**208.10**
10	01558	17.7	**293.70**
12	01559	25.9	**427.60**
15*			

Part No. SV 159
Vent Cap with Set Screw

Size	*UPC# 611942-	Weight	List Price Each
4	01574	2.6	**$92.00**

Part No. SV 169
P Trap

Size	*UPC# 611942-	Weight	List Price Each
2	01604	7.1	**$82.70**
3	01605	13.1	**123.40**
4	01606	23.2	**177.70**
5	01607	30.4	**440.90**
6	01608	42.0	**548.20**
8	01609	86.2	**1,653.50**

*Please see Extra Heavy price sheet.

Part No. SV 170
Running Trap

Size		*UPC# 611942-	Weight	List Price Each
4		01612	19.3	**$348.30**
6		01614	45.1	**1,544.00**

Part No. SV 174
Running Trap with Single Hub Vent

Size	Vent Size	*UPC# 611942-	Weight	List Price Each
3	3	01616	17.7	**$276.00**
4	4	01617	28.4	**375.50**
5	4	01618	39.7	**598.60**
6	4	01619	45.9	**1,610.50**
8	4	01620	104.3	**7,449.30**
8	6	01621	99.7	**5,753.30**

Part No. SV 175
Running Trap with Double Hub Vent

Size	Vent Size	*UPC# 611942-	Weight	List Price Each
3	3	01623	19.7	**$322.50**
4	4	01624	36.3	**451.80**
5	4	01625	45.1	**824.90**
6	4	01626	57.3	**1,615.00**
6	6	04187	61.5	**1,973.50**
8	4	04221	104.3	**7,201.80**
8	6	04407	107.4	**7,397.00**
10	8	04408	187.0	**8,329.60**
12	10	04749	287.6	**11,726.50**
15	12	04403	460.0	**25,533.00**

Part No. SV 180
Deep Seal P Trap

Size		*UPC# 611942-	Weight	List Price Each
2		01627	8.1	**$146.60**
3		01628	14.3	**181.00**
4		01629	29.0	**287.00**
6		01631	40.5	**684.40**

Part No. SV 184
Improved Running Trap with Double Cleanout and Tee Branch

Size	IPS TAP	*UPC# 611942-	Weight	List Price Each
4	3½	01636	32.3	**$797.10**
4x3	3½	01637	34.3	**632.50**

Illustration Shows Right Hand Cleanout

Part No. SV 188
P Trap with Right Hand Cleanout

Size	IPS TAP	*UPC# 611942-	Weight	List Price Each
4	3	01640	20.5	**$400.20**

Illustration Shows Left Hand Cleanout

Part No. SV 188 A
P Trap with Left Hand Cleanout

Size	IPS TAP	*UPC# 611942-	Weight	List Price Each
4	3	01642	20.5	**$400.20**

Part No. SV 198
P Trap with ½″ Tap In Heel

Size	*UPC# 611942-	Weight	List Price Each
2	01649	7.0	**$136.50**
3	01651	13.1	**230.70**
4	01652	22.5	**252.60**

Part No. SV 200
Closet Bend, Plain - Less Collar

Size	*UPC# 611942-	Weight	List Price Each
3x4x6x12	01655	10.7	**$169.30**
3x4x6x15	12074	12.0	**206.90N**
3x4x6x16	01656	12.0	**202.50**
3x4x6x18	12147	13.0	**268.00N**
3x4x8x18	01658	14.0	**314.40**
3x4x10x12	12075	13.0	**207.30N**
3x4x10x15	12149	13.0	**247.30N**
3x4x10x16	04889	16.1	**285.50**
3x4x10x18	12150	16.0	**257.70N**
3x4x12x12	01659	15.9	**217.60**
3x4x16x16	01660	20.6	**319.10**
3x4x18x18	01662	22.7	**400.00**
3x16x16	01664	16.7	**296.40**
4x4x12	01665	11.5	**149.10**
4x4x16	01666	14.3	**215.70**
4x4x18	01669	17.3	**248.70**
4x6x12	01667	12.5	**172.50**
4x6x15	12154	15.0	**248.70N**
4x6x16	01668	16.9	**248.70**
4x6x18	01670	14.0	**281.20**
4x8x16	01673	18.4	**217.60**
4x8x18	01674	19.8	**307.70**
4x10x12	01675	14.5	**202.50**
4x10x15	12156	18.0	**285.50N**
4x10x16	01676	19.6	**277.30**
4x10x18	12157	19.0	**299.00N**
4x12x12	01678	14.0	**220.30**
4x12x14	12158	14.0	**245.20N**
4x12x16	01679	20.8	**251.20**
4x12x18	01680	19.0	**302.10**
4x14x16	04198	22.6	**283.30**
4x14x18	01682	24.0	**312.00**
4x16x16	01683	23.8	**327.70**
4x16x18	04180	24.7	**334.30**
4x18x18	01684	27.4	**518.70**

How To Read Reducing Closet Bends:
The two outside numbers then the two inside numbers.
Example: 3x4x6x12
The 3″ is 12″ Long. The 4″ is 6″ Long.

N = Non-stock item; Contact customer service for availability.

Part No. SPL 217
Offset Closet Flange
(To Offset 1″; Fits over 4″ pipe for caulked joints)

Size	*UPC# 611942-	Weight	List Price Each
4x2	12145	3.0	$139.80N
4x2½	00746	4.4	147.40
4x4 **	12146	5.0	261.50N

Part No. SPL 219
Greensboro Reducing Closet Flange
(Can be used to caulk over 3″ pipe or use coupling to 4″ No-Hub pipe.)

Size	*UPC# 611942-	Weight	List Price Each
4x3x3	00748	3.6	$73.40

Part No. SPL 220
Notched and Slotted Closet Flange
(Fits over 4″ pipe for caulked joints.)

Size	*UPC# 611942-	Weight	List Price Each
4x1	00749	2.2	$40.60
4x1½	00750	2.6	40.60
4x2	00752	3.0	48.50
4x2½	00751	3.6	53.50
4x3	00753	4.5	65.60
4x4	00754	4.7	86.50
4x5	00755	4.5	144.90
4x6	00756	5.3	151.90

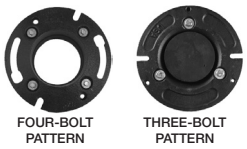

Part No. SPL 225
Instant Set Closet Flange

Size	*UPC# 611942-	Weight	List Price Each
3x2†	04967	3.5	$204.40
4x2◊	04947	5.6	164.50
4x2‡	12124	3.0	172.00N
4x4◊	12125	4.0	221.10N
4x4‡	12126	4.0	230.30N
4x3§	12127	3.0	166.30N

Part No. SV 206
Tapped Closet Bend with Southern Code Brass Plug

Size	*UPC# 611942-	Weight	List Price Each
3½x4x4x18	01745	17.7	$293.90

Part No. SV 208
Hub End Closet Bend, Low Hub

Size	*UPC# 611942-	Weight	List Price Each
4x12	01747	14.2	$220.40
4x14	01748	15.4	228.10
4x16	01749	17.5	344.50
4x18	01750	18.9	345.60

N = Non-stock item; Contact customer service for availability.

Part No. SV 228
Iron Body Cleanout Ferrule - Body Only - Less Brass Plug

Size	Tap	*UPC# 611942-	Weight	List Price Each
2	1½	01751	1.2	$30.70
3	2½	01752	1.9	49.50
4	3	01755	3.9	60.70
4x3½	3½	01754	3.6	62.80
4x8	3½	01753	8.1	181.50
5	4	01757	4.5	84.60
6	5	01758	5.8	115.10
8	6	01759	11.7	220.30
10	6	01760	17.6	349.60
12	6	01761	29.0	481.80
15*	6			

Part No. SV 228 S
Iron Body Cleanout Ferrule - with Southern Raised-Head Brass Plug Installed

Size	Tap	*UPC# 611942-	Weight	List Price Each
2	1½	01805	1.4	$64.60
3	2½	01806	2.4	97.00
4	3	01807	4.1	113.00
4x12	3½	01816	9.9	383.40
5	4	01809	5.5	170.60
6	5	01810	6.5	264.10
8	6	01811	13.9	529.70
10	6	01812	18.5	659.70
12	6	01813	27.7	791.60
15*	6			

Iron Body Cleanout with plugs installed can only be ordered as shown in the catalog. When ordering Iron Body Cleanout with plugs other than Southern Code, please order the fitting less plug, then order the plug from the Specials and Plugs section, page one.

Example 1:

Part No.	Quantity	Description
SV 228	4	4″ Iron Body Cleanout
PLG 410	4	3″ Ohio Plug

When Iron Body Cleanouts with plugs other than Southern Code are ordered, the plugs will be packed separately in a burlap bag inside the shipping crate.

Part No. SV 253
Sission Insertable Joint

Size	*UPC# 611942-	Weight	List Price Each
2	01844	7.0	$148.30
3	01845	11.6	232.70
4	01846	12.9	256.20
5	01847	15.4	322.50
6	01848	20.4	392.60
8	01849	37.0	777.80

* Please see Extra Heavy price sheet.
** 2″ Offset
† Four-bolt pattern. Test cap configuration not offered.
◊ Three-bolt pattern. Does not include test cap.
‡ Three-bolt pattern. Includes test cap.
§ Three-bolt reducing pattern. Includes test cap.

Size	*UPC# 611942-	Weight	List Price Each

Part No. SV 458
Vented Closet Tee with 2″ Top Vent and 2″ Extended Side Inlet

(Right Hand or Left Hand; Designed for use below the floor; Fitting does not require a baffle.)

(Illustrations show right hand)

(Side View)

(Top View)

4x4x2x2x4 RH	01851	37.8	**$649.10**
4x4x2x2x4 LH	01850	37.8	**649.10**

Part No. SV 459 D
Vented Closet Cross with 2″ Top Vent and 2″ Extended Side Inlet

(Designed for use below the floor; Fitting does not have a baffle.)

(Side View)

(Not a baffled fitting)

(Side View Rotated 90°)

4x4x2x2x4	01853	47.0	**$735.10**

Part No. SV 460
Vented Closet Tee with 2″ Top Vent

(Right Hand or Left Hand; Designed for use below the floor; Fitting does not require a baffle.)

(Illustrations show left hand)

(Side View)

(Not a baffled fitting)

(Top View)

4x4x2x4 RH	01854	35.0	**$649.10**
4x4x2x4 LH	01855	35.0	**649.10**

Part No. SV 463 D
Vented Closet Cross with 2″ Top Vent

(Designed for use below the floor. Fitting does not have a baffle.)

(Side View)

(Not a baffled fitting)

(Side View Rotated 90°)

4x4x2	01856	43.8	**$735.10**

Part No. SV 566
Tapped Long Sweep Tee

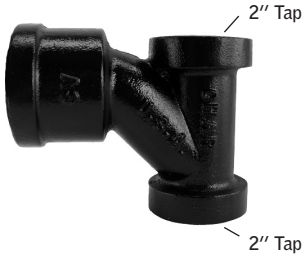

2x2	01857	6.2	**$134.30**

Part No. SV 581
Double Sink Stack-1770 **(Designed for use above the floor.)**

(Side View)

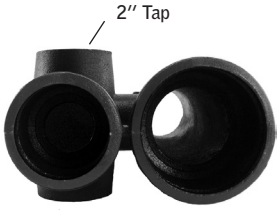

(Top View)

3x2x2	01858	21.9	**$313.70**
4x2x2	01859	22.8	**$313.70**

Part No. SV 581 B
Double Sink Stack with Baffle **(Designed for use above the floor.)**

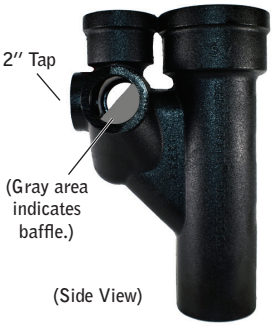

(Side View)

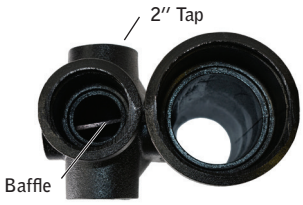

(Top View)

4x2x2	14561	23.8	**$405.00**

Size	*UPC# 611942-	Weight	List Price Each

Part No. SV 973 R
Right Hand Starter Fitting with 4″ Tap and 2″ Tapped "A" Side Inlet
(Designed for use above the floor with back-outlet water closets)

(Side View with "A" Inlet 9 1/2″) (Top View)

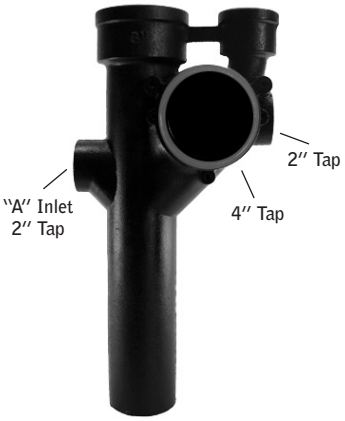

VARIABLE
A
6½
9½

4″ Right Hand Starter w/4″ Tap A Inlet 6½″	01878	46.0	**$620.00**
4″ Right Hand Starter w/4″ Tap A Inlet 9½″	01879	34.4	**683.50**

Part No. SV 973 L
Left Hand Starter Fitting with 4″ Tap and 2″ Tapped "A" Side Inlet
(Designed for use above the floor with back-outlet water closets)

(Side View with "A" Inlet 9 1/2″) (Top View)

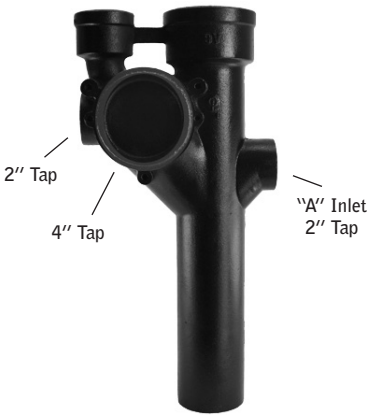

VARIABLE
A
6½
9½

4″ Left Hand Starter w/4″ Tap A Inlet 6½″	01875	47.1	**$620.00**
4″ Left Hand Starter w/4″ Tap A Inlet 9½″	01876	38.4	**683.50**

Part No. SV 974 R
Right Hand Starter Fitting with 4″ Hub and 2″ Tapped "A" and "B" Side Inlets
(Designed for use below or in the floor with bottom-outlet water closets)

(Side View with "A" Inlets) (Side View, with "A" and "B" Inlets)

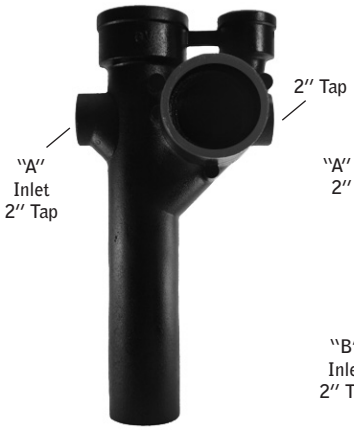

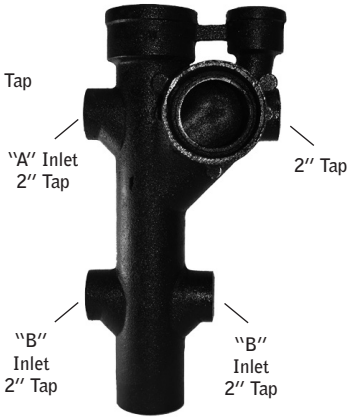

4″ Right Hand Starter w/4″ Hub A Inlet 6½″	01883	50.4	**$620.00**
4″ Right Hand Starter w/4″ Hub A Inlet 6½″ B Inlet 18″	11094	46.2	**807.00**

Part No. SV 974 L
Left Hand Starter Fitting with 4″ Hub and 2″ Tapped "A" and "B" Side Inlets
(Designed for use below or in the floor with bottom-outlet water closets)

(Side View with "A" Inlets) (Side View, with "A" and "B" Inlets)

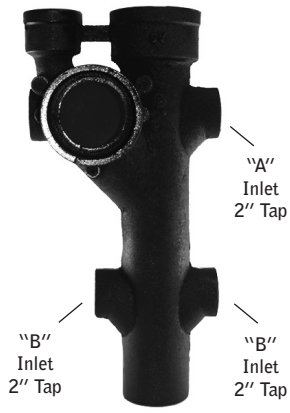

4″ Left Hand Starter w/4″ Hub A Inlet 6½″	01881	49.4	**$620.00**
4″ Left Hand Starter w/4″ Hub A Inlet 6½″ B Inlet 18″	11093	43.0	**807.00**

Size	*UPC# 611942-	Weight	List Price Each	Size	*UPC# 611942-	Weight	List Price Each

Part No. SV 975
Double Starter Fitting with 4″ Tap and 2″ Tapped "A" Side Inlet
(Designed for use above the floor with back-outlet water closets)

(Side View) (Top View)

4″ Double Starter w/4″ Tap A Inlet 9½″	01886	50.3	**$911.70**

Part No. SV 976
Double Starter Fitting with 4″ Hub and 2″ Tapped "A" or "A" and "B" Side Inlets
(Designed for use below or in the floor with bottom-outlet water closets)

(View with "A" Inlet) (View with "A" and "B" Inlets)

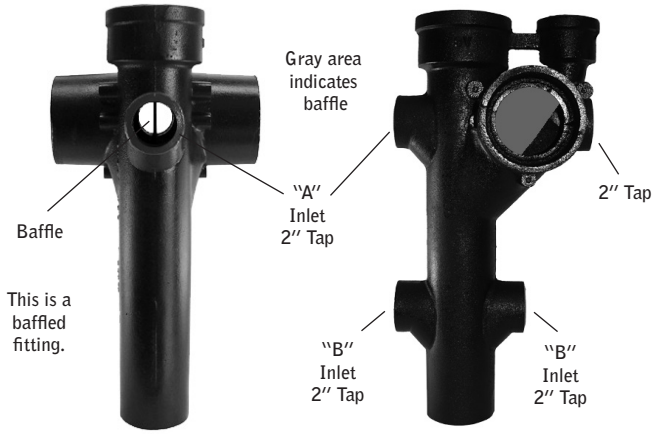

4″ Double Starter w/4″ Hub A Inlet 6½″	01888	60.0	**$827.00**
4″ Double Starter w/4″ Hub A Inlet 6½″ B Inlet 18″	11095	56.8	**1,025.50**

Part No. SV 982
Tapped By-Pass Vent Fitting

(Side View)

(Top View)

2x2	01890	11.3	**$232.80**

Part No. SV 985
Tapped Bath Vent Wye

(Top View)

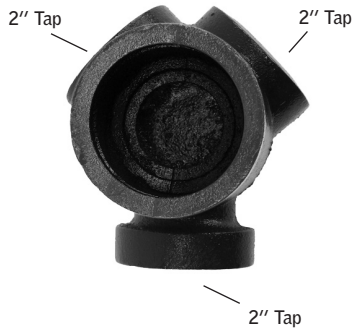

(Side View)

2x2	01891	8.4	**$158.20**

Size	*UPC# 611942-	Weight	List Price Each	Size	*UPC# 611942-	Weight	List Price Each

Part No. SV 1739 L
Left Hand Vented Closet Tee with 2″ 45° Taps
(Designed for use above the floor)

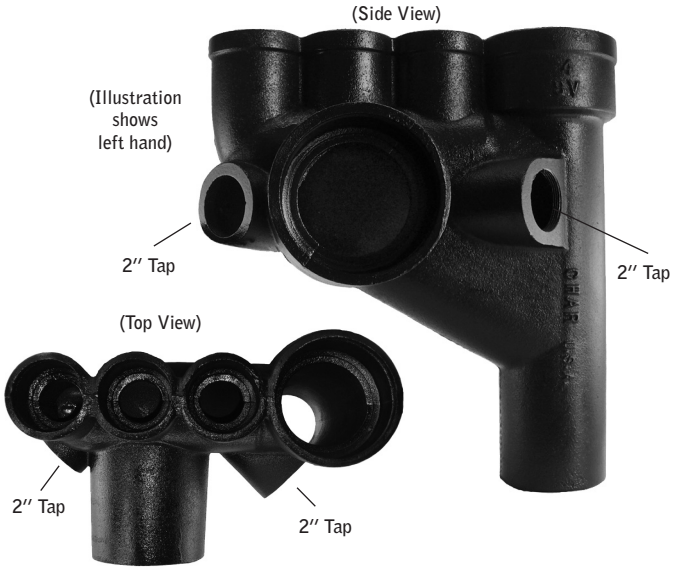

4x2x4x2 LH	01893	66.1	**$936.20**

Part No. SV-1739 R
Right Hand Vented Closet Tee with 2″ 45° Taps
(Designed for use above the floor)

4x2x4x2 RH	01894	59.8	**$936.20**

Part No. SV-1739 D
Vented Closet Cross with 2″ 45° Taps
(Designed for use above the floor)

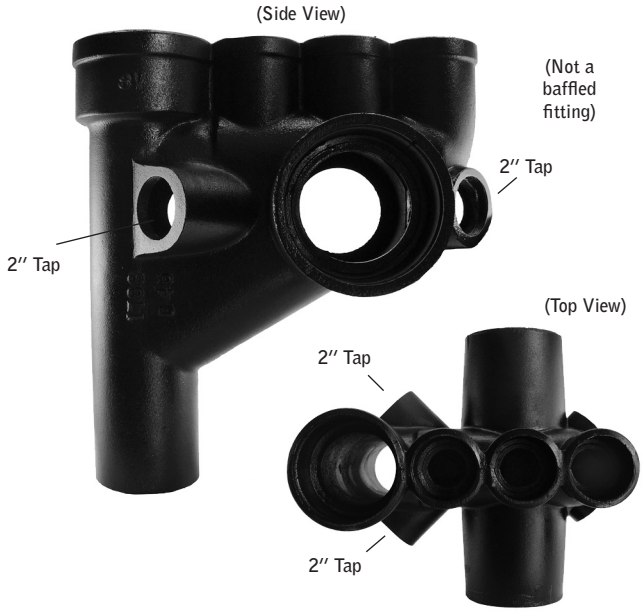

4x2x4x2	01892	58.2	**$1,093.40**

Part No. SV 1801
2 x 2 x 2 Tapped Harp Fitting

2x2x2	01895	17.2	**$227.60**

ILLUSTRATIONS OF MULTI-STORY HUB AND SPIGOT APPLICATIONS

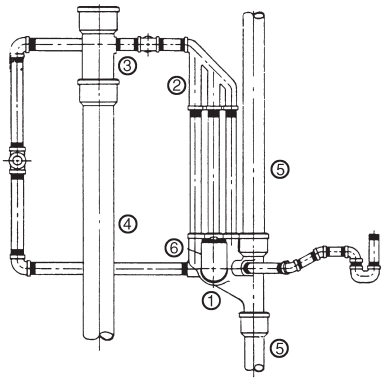

① **SV-1739 Left Hand Vented Closet Tee w/2″ 45° Taps**
② **SV-1801 2x2x2 Tapped Harp Fitting**
③ **SV-83 5x2 St. Tapped Tee**
④ **5x10 SV Single Hub Pipe**
⑤ **4x10 SV Single Hub Pipe**
⑥ **SV-206 4x4x18 Tapped Closet Bend with Southern Code Brass Plug**

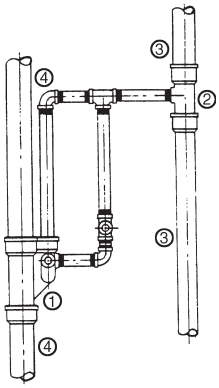

① **SV-581 4x2x2 Double Sink Stack–1770**
② **SV-83 3x2 St. Tap Tee**
③ **3x10 Single Hub Pipe**
④ **4x10 Single Hub Pipe**

CHARLOTTE® SPEED-PAK

FIVE FOOT PIPE BUNDLES

SERVICE				
	SIZE	PIECES	WEIGHT	HEIGHT
Single Hub	2″	100	2248	20″
	3″	60	1910	22″
	4″	46	1904	25″
	5″	33	1750	31″
	6″	23	1591	31″
	8″	11	1128	30″
	10″	8	1226	27″
	12″	6	1114	31″
	15″	2	575	34″

TEN FOOT PIPE BUNDLES

SERVICE				
	SIZE	PIECES	WEIGHT	HEIGHT
Single Hub	2x10′	54	2165	12″
	3x10′	36	2141	15″
	4x10′	27	2028	18″
	5x10′	24	2409	20″
	6x10′	18	2211	23″
	8x10′	8	1444	22″
	10x10′	6	1558	27″
	12x10′	6	2075	30″
	15x10′	2	1050	23″

Weights are approximate and are for shipping purposes only.

All products manufactured by Charlotte Pipe and Foundry Company are proudly made in the U.S.A.

Note: Dimensions and tolerances for Service pipe and fittings are published in Charlotte Pipe's Cast Iron Dimensional Catalog and also Charlotte Pipe's Cast Iron Technical Manual.

CHARLOTTE® CAST IRON SOIL PIPE AND FITTINGS SPECIFICATIONS

This is to certify that products manufactured by Charlotte Pipe and Foundry, Cast Iron Division, are manufactured in the United States and conform to the following standards:

SERVICE HUB AND SPIGOT PIPE AND FITTINGS

All cast iron soil pipe and fittings shall be marked with the collective trademark of the Cast Iron Soil Pipe Institute (CISPI).
ASTM A 74
Listed by NSF® International to the UP Code
ISO 9001:2015 Certified

COMPRESSION GASKETS

ASTM C 564
CISPI HSN 85

Charlotte Pipe products are manufactured to the applicable ASTM standard. Charlotte Pipe and Foundry cannot accept responsibility for the performance, dimensional accuracy, or compatibility of pipe, fittings, gaskets, or couplings not manufactured or sold by Charlotte Pipe and Foundry.

Charlotte Pipe and Charlotte are registered trademarks of Charlotte Pipe and Foundry Company.

TERMS AND CONDITIONS OF SALE

Terms and Conditions of Sale can be found at https://charlottepipe.com/terms_and_conditions.aspx

LIMITED WARRANTY

Charlotte Pipe and Foundry Company® (Charlotte Pipe®) Products are warranted to be free from manufacturing defects and to conform to currently applicable ASTM standards for a period of five (5) years from date of delivery. Buyer's remedy for breach of this warranty is limited to replacement of, or credit for, the defective product. This warranty excludes any expense for removal or reinstallation of any defective product and any other incidental, consequential, or punitive damages. **This limited warranty is the only warranty made by seller and is expressly in lieu of all other warranties, express and implied, including any warranties of merchantability and fitness for a particular purpose.** No statement, conduct or description by Charlotte Pipe or its representative, in addition to or beyond this Limited Warranty, shall constitute a warranty. This Limited Warranty may only be modified in writing signed by an officer of Charlotte Pipe.

This Limited Warranty will not apply if:

1) The Products are used for purposes other than their intended purpose as defined by local plumbing and building codes, and the applicable ASTM standard.
2) The Products are not installed in good and workmanlike manner consistent with normal industry standards; installed in compliance with the latest instructions published by Charlotte Pipe and good plumbing practices; and installed in conformance with all applicable plumbing, fire and building code requirements.
3) This limited warranty does not apply when the products of Charlotte Pipe are used with the products of other manufacturers that do not meet the applicable ASTM or CISPI standards or that are not marked in a manner to indicate the entity that manufactured them.
4) In hubless cast iron installations, this warranty will not apply if products are joined with unshielded hubless couplings. Charlotte Pipe requires that its hubless cast iron pipe and fittings be joined only with shielded hubless couplings manufactured in accordance with CISPI 310, ASTM C 1277 and certified by NSF® International or with Heavy Duty Couplings meeting ASTM C 1540.
5) The Products fail due to defects or deficiencies in design, engineering, or installation of the piping system of which they are a part.
6) The Products have been the subject of modification; misuse; misapplication; improper maintenance or repair; damage caused by the fault or negligence of anyone other than Charlotte Pipe; or any other act or event beyond the control of Charlotte Pipe.
7) The Products fail due to the freezing of water in the Products.
8) The Products fail due to contact with chemical agents, fire stopping materials, thread sealant, plasticized vinyl products, or other aggressive chemical agents that are not compatible.
9) Pipe outlets, sound attenuation systems or other devices are permanently attached to the surface of Charlotte® PVC, ABS or CPVC products with solvent cement or adhesive glue.

Charlotte Pipe products are manufactured to the applicable ASTM or CISPI standard. Charlotte Pipe and Foundry **cannot** accept responsibility for the performance, dimensional accuracy, or compatibility of pipe, fittings, gaskets, or couplings not manufactured or sold by Charlotte Pipe and Foundry.

This Limited Warranty will not apply unless written notice of a claim is mailed to Charlotte Pipe at the address below within 30 days of discovery of the allegedly defective product.

Any Charlotte Pipe products alleged to be defective **must** be made available to Charlotte Pipe at the following address for verification, inspection and determination of cause:

Charlotte Pipe and Foundry Company
Attention: Technical Services
2109 Randolph Road
Charlotte, North Carolina 28207

Purchaser must obtain a return materials authorization and instructions for return shipment to Charlotte Pipe of any product claimed defective or shipped in error.

Any Charlotte Pipe product **proved** to be defective in manufacture will be replaced F.O.B. point of original delivery, or credit will be issued, at the discretion of Charlotte Pipe.

4/20/21

Charlotte, Charlotte Pipe and "You can't beat the system" are registered trademarks of Charlotte Pipe and Foundry Company.

PO BOX 35430 CHARLOTTE, NORTH CAROLINA 28235
SALES PHONE (704) 348 6450 (800) 572 4199
TECHNICAL PHONE (800) 438 6091 FAX (800) 553 1605
WWW.CHARLOTTEPIPE.COM

CHARLOTTE
PIPE AND FOUNDRY COMPANY®

PO BOX 35430
CHARLOTTE
NORTH CAROLINA 28235
PHONE (704) 348-6450
(800) 438-6091
FAX (800) 553-1605
WWW.CHARLOTTEPIPE.COM

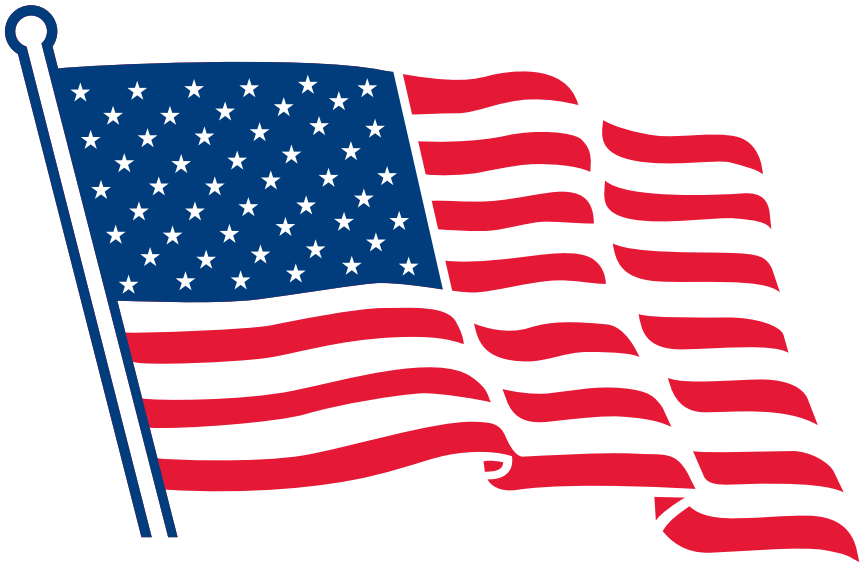

All products manufactured by
Charlotte Pipe and Foundry Company
are proudly made in the U.S.A.

MADE IN USA